GUIA DE INSTALAÇÃO

RIPEX®
Sensory Surfaces

1 TRANSPORTATION AND STORAGE

When transported, the decorative slats, profiles and clips must remain protected in the original packaging and stored inside, before installation. No heavy objects should be stored on top of the profiles to avoid possible damage and/or warping.

2 APPLICATIONS

The profiles can be used for horizontal, vertical or diagonal facade. Use only coatings as specified by the manufacturer.

3 SAFETY RULES

Wear protective clothing and safety equipment such as safety glasses, gloves, long sleeves
and mask, especially when cutting aluminum.
The installer is responsible for identifying and following all building codes and good construction safety practices.
The manufacturer is not responsible for incorrect installation of this product.
The façade system may not be suitable for all applications and it is the sole responsibility of the installer to ensure that the system is suitable for its intended use. Since every installation is unique, it is also the installer's responsibility to determine the specific requirements for each coating application.

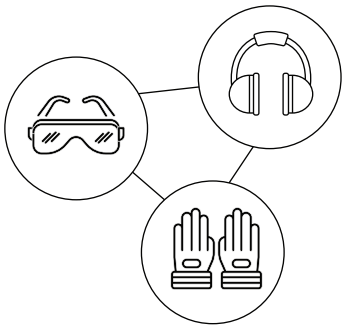

We recommend that all applications be reviewed by an authorized architect, engineer or local building official prior to installation.

4 WHAT TO CHECK

The wall must be straight, level or plumb.
Each fixing profile or clip must be fixed to a flat and rigid surface (walls or ceilings) using appropriate fixings and adapted to the surface to which the profiles or clips will be fixed.

5 DIFFERENT CONFIGURATIONS

For horizontal facades, Flat Rail fixing profiles or fixing clips must be placed vertically..

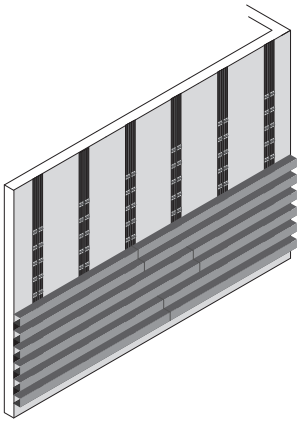

For vertical facades, Flat Rail fixing profiles or fixing clips must be placed horizontally.

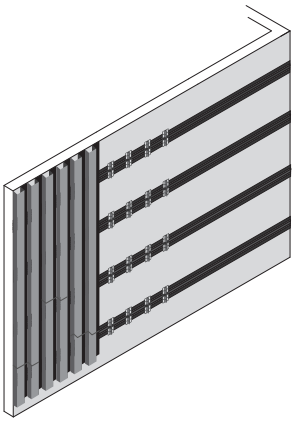

6 BEFORE INSTALLING

Flat Rail fixing profiles or fixing clips can be fixed directly to a wall, ceiling, concrete beams, iron or any hard, flat, plumb or level surface, using the appropriate fixings.
Apply the first Flat Rail or fixing clip no more than 10 cm from the end of any wall to be covered.
Flat Rail fixing profiles or fixing clips must be placed at least 10 cm from the lower and upper slab.
The Flat Rail profiles must be parallel to each other and the clips must be aligned (as shown). A laser level or chalk line can be used for quick and ideal results.
Flat rail fixing profiles or fixing clips can be adjusted up to a maximum of 60 cm.
Always consult the manufacturer's instructions.

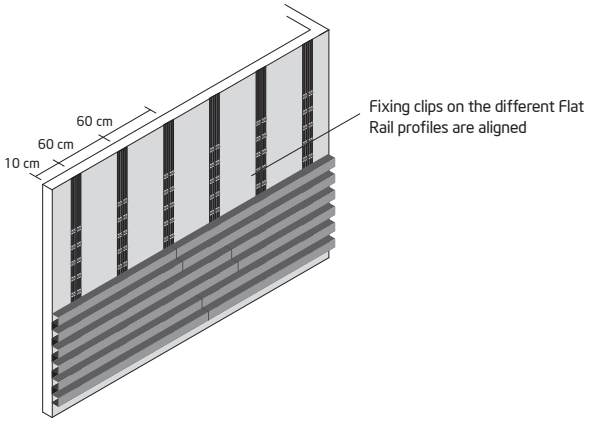

7 JOIN IN THE ALUMINIUM PROFILE

Recommended union on the aluminum profile:

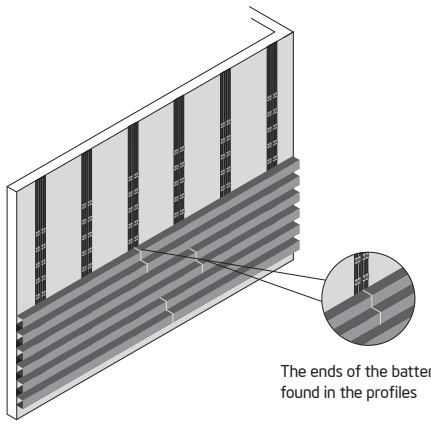

The ends of the batten are found in the profiles

Mixed union:

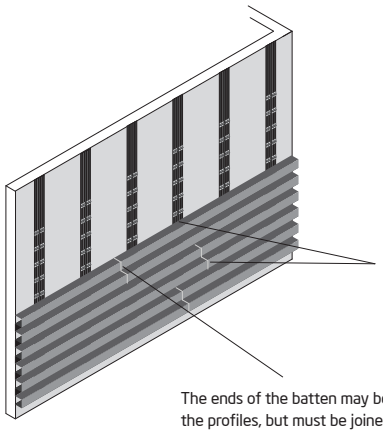

The Slats must be fixed to at least 2 profiles

The ends of the batten may be outside the profiles, but must be joined with fixing clips.

- **Add individual clips to the back of the slats when the slat edges are not in the profiles:**

Front view:

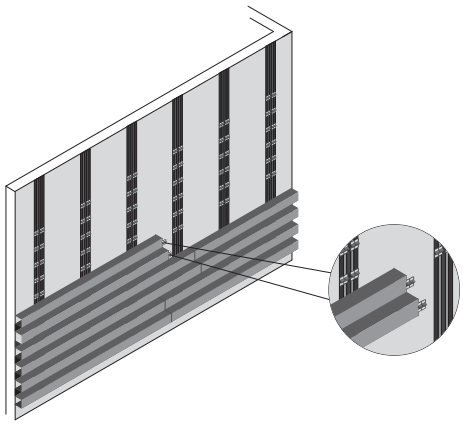

Rear :

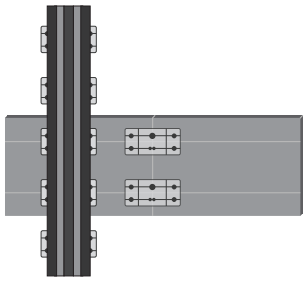

8 BEFORE INSTALLING

Flat Rail fixing profiles or fixing clips can be fixed directly to a wall, ceiling, concrete beams, iron, wood or any hard, flat surface with the appropriate fixing.
Fixing profiles or clips must be placed at least 10 cm from the ground. Consult the siding manufacturer's guidelines for the minimum height at which the siding should begin from the ground. The fixing profiles or clips can be adjusted up to a maximum of 60 cm.
Consult the coating manufacturer's guidelines to find out what extension to adopt with your material.
The fixing profiles or clips must be parallel to each other and the clips must be aligned (as shown). A laser level or chalk line can be used for quick and ideal results.

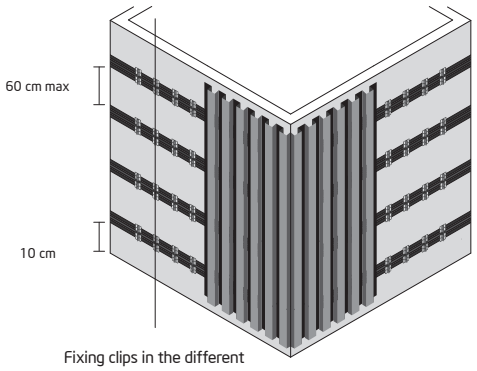

Fixing clips in the different Flat Rail Profiles they must always be aligned

- **Add individual fixing clips to the back of the decorative strips whenever the ends of the strips are not resting on the Flat Rail profiles:**



The slats must be fitted into at least 2 profiles

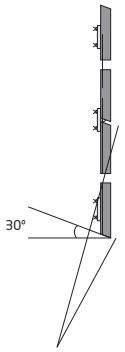

It's recommend to cut the slats at a 30 degree angle to drain water when they are installed vertically.



The ends of the slats can be on a profile or outside, in which case use individual clips to join the slats together

- **Add glue to all the bottom clips to prevent the slats from sliding over time:**

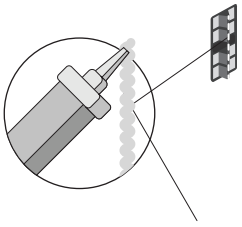

Add polyurethane-based glue (glue and seal) to clips per board before fitting the decorative batten to the profile